The Way Too Cool

Design Considerations for Metal Core Printed Circuit Board

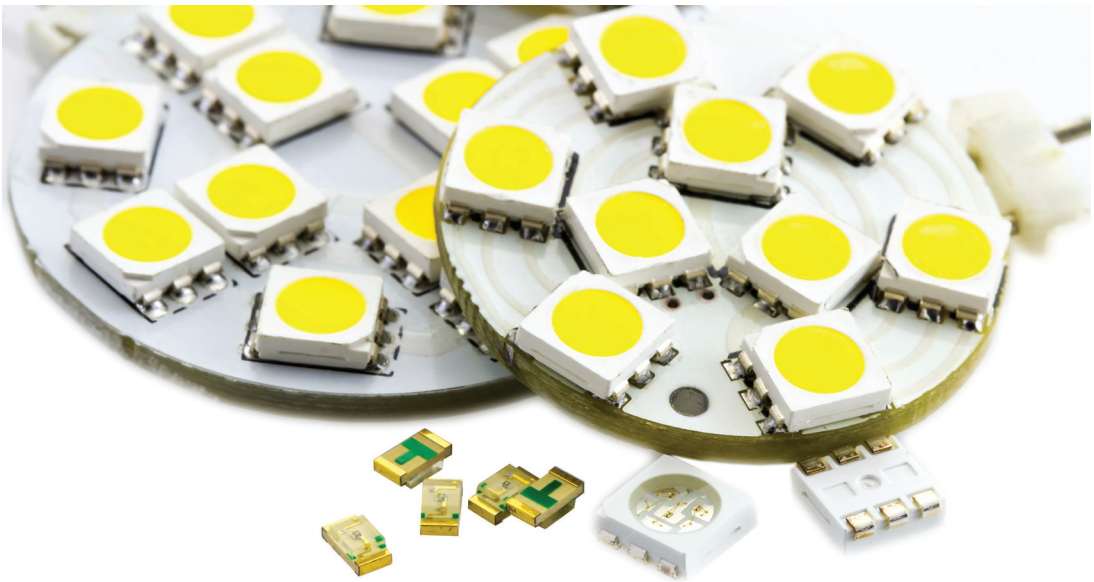

Designing an aluminium board is similar to a traditional FR-4 board in terms of imaging and wet processing operations. But you have to consider a secondary mechanical operations to make the design manufacturable and cost-effective.

Also considerations for soldermask, legend and mechanical fabrication will be required.

Manufacturing a Cost-Effective Board

Material Stack Up

1050 aluminium is used for bendable MCPCB.
5052 aluminium is the most cost effective base material for flat MCPCB.
6061-T6 is also available but more expensive.

Multilayer MCPCB boards are available at a substantial premium.

1050	5052	6061
0.15	0.4	1.0
0.18	0.5	1.5
0.20	0.6	1.6
0.25	0.8	2.0
0.30	1.0	2.5
	1.2	3.0
	1.5	
	1.6	
	2.0	
	2.5	
	3.0	
All based in MM		

Base Material Thickness
Using standard thickness will also control costs. 1.0mm (.040) and 1.6mm (.062) are the most common.

Flatness
Flatness is affected by the amount of copper required, therefore CTE (Coeffcient of Thermal Expansion) rules must be considered. This will allow the heavier the copper construction with the required thicker aluminum or copper base to prevent bowing. Additional dielectric thickness will be required for drilling, scoring, routing and punching.

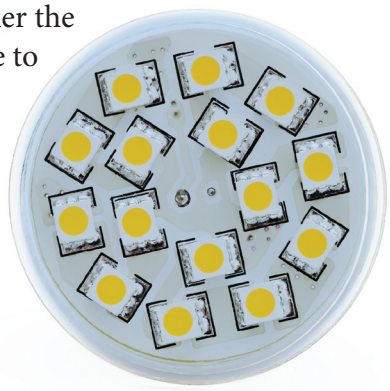

Dielectric
The standard dielectrics are 1.0 W/m.k., 1.5 W/m.k., and 2.0 W/m.k. The higher the dielectric the more expensive the board. Standard TG is 140 Degrees. Also available is 170 Degrees at a slightly higher cost.

Copper Circuit Foil
The thinner the circuit foil chosen the lower the cost. . H oz, 1 oz, and 2 oz are most common copper foils. Typically there will be an increase in the current capability of MCPCB when compared to standard FR-4 boards.

Minumum Circuit Width

Circuit Thickness	Minimum Circuit Width	
35µm (1oz)	0.13mm (0.005")	IPC-6012 35.I 80%
70µm (2oz)	0.15mm (0.006")	IPC-6012 35.I 80%
105µm (3oz)	0.18mm (0.007")	IPC-6012 35.I 80%
140µm (4oz)	0.20mm (0.008")	IPC-6012 35.I 80%
210µm (6oz)	0.15mm (0.010")	IPC-6012 35.I 80%
280µm (8oz)	0.38mm (0.015")	IPC-6012 35.I 80%
350µm (8oz)	0.38mm (0.015")	IPC-6012 35.I 80%

Minumum Space And Gap

Single Layer (Non-Plated)	Multi-Layer (Plated)	
35µm (1oz) - 0.18mm (0.007")	35µm (1oz) - 0.23mm (0.009")	IPC-6012 35.2 80%
70µm (2oz) - 0.23mm (0.009")	70µm (2oz) - 0.28mm (0.0011")	IPC-6012 35.2 80%
105µm (3oz) - 0.30mm (0.0012")	105µm (3oz) - 0.36mm (0.0014")	IPC-6012 35.2 80%
140µm (4oz) - 0.36mm (0.0014")	140µm (4oz) - 0.41mm (0.0016")	IPC-6012 35.2 80%
210µm (6oz) - 0.51mm (0.020")	210µm (6oz) - 0.56mm (0.022")	IPC-6012 35.2 80%
280µm (8oz) - 0.61mm (0.0024")	280µm (8oz) - 0.66mm (0.0026")	IPC-6012 35.2 80%
350µm (8oz) - 0.76mm (0.0030")	350µm (8oz) - 0.81mm (0.0032")	IPC-6012 35.2 80%

Soldermask

Super Bright White is the most commonly used with a reflectivity of approximately 89% and other colors such as green, black, red and blue are also available.

Minimum Solder Mask Aperture	0.20 x 0.20 (0.008" x 0.008")
Minimum Character Height & Line Width For Nomenclature	0.20 x 0.20 (0.008" x 0.008")
Solder Color	Green, White, Black, Red, & Blue Are Available
Character Height / Width (In Solder Mask)	Minimum Character Height / Minimum Line Width 0.25mm (0.010")

Legend

Nomenclature Typically On White Solder Mask is Black

Nomenclature To Pad (Ink Jet Printing)	Recommended Minimum Distance From Nomenclature To Nearest Pad Is 0.25mm (0.010")
Character Height & Width	1.5mm (0.060") Minimum Height, 0.15mm (0.006") Minimum Width
Minimum Distance To Board Edge	One Base Plate Material Thickness
Nomenclature Color	White Is Standard (Black Is Optional)

Surface Finish
Solderpad finish, HASL, Pb-free HASL are the most cost effective finishes. Other surface finishes such as Immersion Tin, Immersion Silver, ENIG, ENEPIG (for gold wire bonding)and OSP are available, but consideration on cost and shelf life play a role when determining a final finish.

Baseplate Finish
On Aluminium, a brushed finish is typical. Other finishes like anodized and irridite are available for additional cost. With copper, a brushed finish is typical, but may oxidize from handling and also atmospheric conditions. Other finishes as electroless nickel are available but are more expensive.

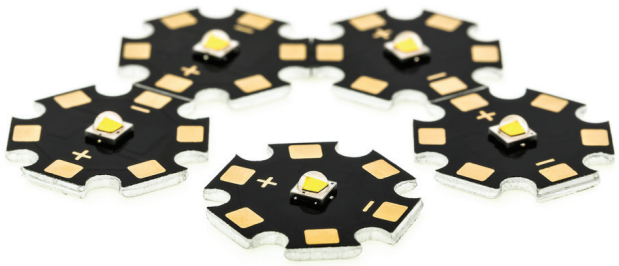

Depanalization
V-Scoring is a viable process for low and high volume production as it allows for maximum material utilization. Typical tolerance for part size, hole position to part edge and circuit to edge is +/-.025 (0.10'). V scoring is a alternative for arrays and circuit to edge spacing can be reduced over a typical blanked part.

Minumum Circuit To Edge Blanking	One Baseplate Material Thickness +0.5mm (0.20")	
	Material Thickness	**Circuit To Edge Distance**
a Minimum Circuit To Edge, **V** - Scoring	1.0mm (0.040")	0.66mm (0.026")
	1.6mm (0.062")	0.74mm (0.029")
	2.0mm (0.080")	0.79mm (0.031")
	3.2mm (0.125")	0.94mm (0.037")
b Minimum Circuit To Edge, Milled	0.5mm (0.20")	
Minimum Conductor To Hole Edge	One Baseplate Material Thickness	
Copper Land With Non Plated Through Holes	Punched Non Plated thru Hole is 0.76mm (0.030")	
Minimum Character Height For Etched Nomenclature	1.5mm (0.060")	

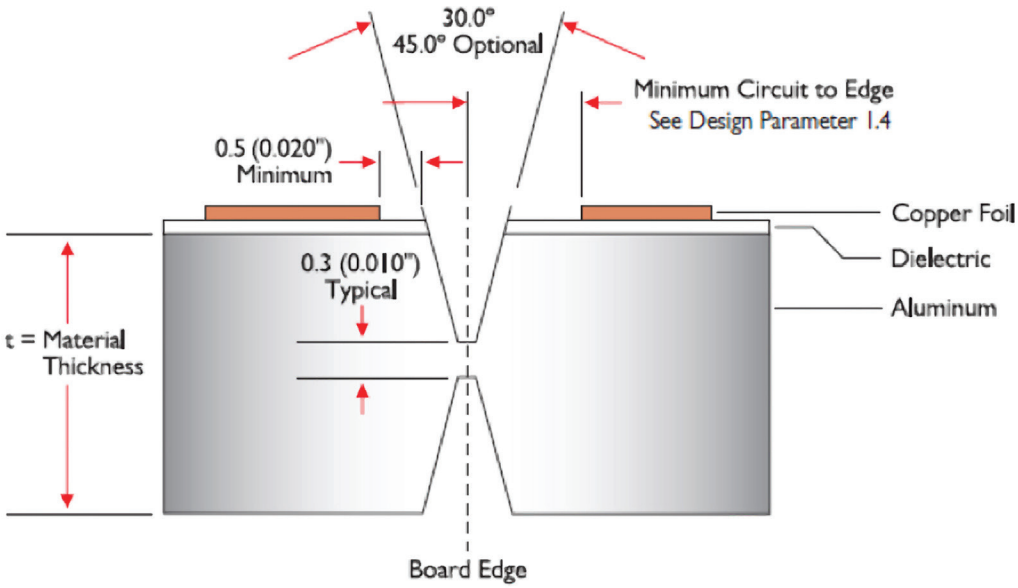

Punching

Is the most cost effective process for medium high to high volume applications. Punching can accommodate complex part geometries and can be held to very tight tolerances. Internal holes can be produced with the most accuracy and the greatest degree of repeatability.

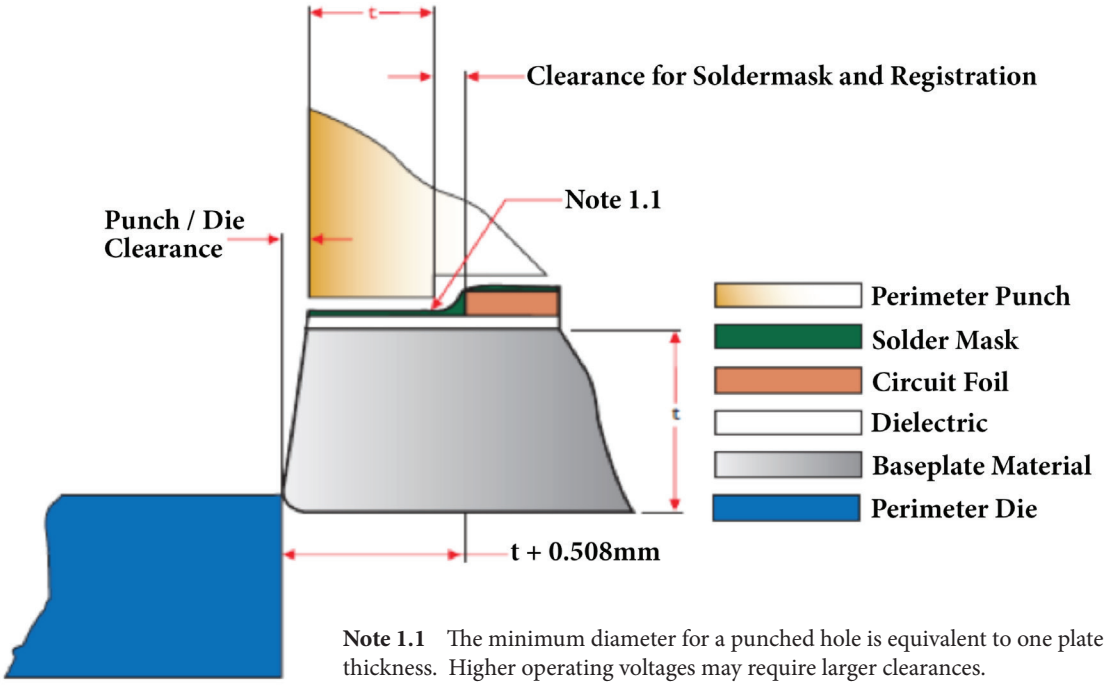

Note 1.1 The minimum diameter for a punched hole is equivalent to one plate thickness. Higher operating voltages may require larger clearances.

Milling

Are typically used for small volume production with complex geometries and not as cost effective in large volumes.

Circuit to Edge

Allow sufficient relief for the circuitry and distance from the circuit to the edge is one material thickness plus 0.5 (0.020)mm from the edge of the hold.

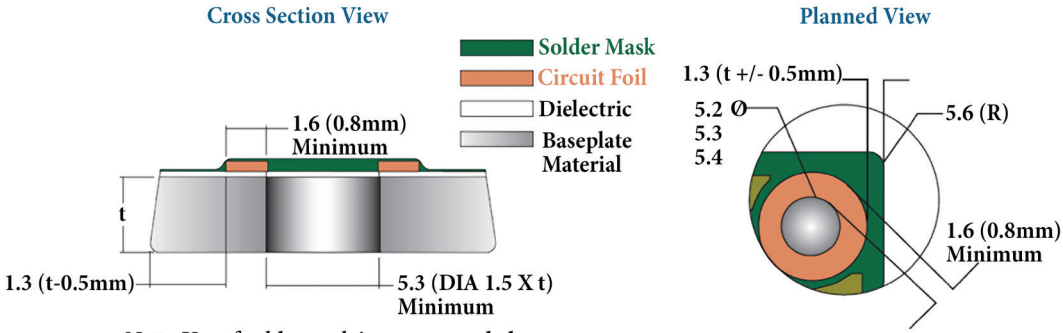

Note: Use of soldermask is recommended

Radii on Corners

Punching requires all inside and outside corners have at least one baseplate material thickness on all corners.

	Material Thickness	Drilled Hole Diameter
Minumum Drill Hole Diameter - Aluminum Baseplate	1.0mm (0.040")	0.76mm (0.030")
	1.6mm (0.062")	0.76mm (0.030")
	2.0mm (0.080")	1.0mm (0.040")
	3.2mm (0.125")	1.6mm (0.062")
Minumum Drill Via Diameter For Circuit Layer	0.36mm (0.014")	
Minumum Edge Radius	One Baseplate Material Thickness For Blanking, No Radius For V-Scoring	

Flatness

There is a effect from the different coefficient of thermal expansion (CTE) between the circuit and the baseplate layer. That effect is determined by the baseplate material selection and ratio of copper foil to baseplate thickness. Constructions with more copper than 10% of the baseplate thickness will possibly exhibit a bow.

Specialized Technology
Multilayer
Countersink
Blind Drilling
Anodic Treatment
Screw Hole Taping

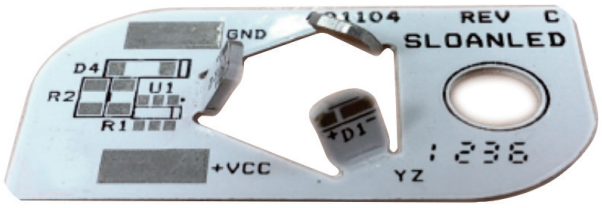

Chip On Board Metal Core CB

MCPCB is used in thermoelectric separation application The Micro-chip or die is directly in touch with the metal core where the heat dissipate. And electrically interconnect the trace of circuit board (wire bonding) so thermal conductivity of COB MCPCB is more than 200 W/m.k.

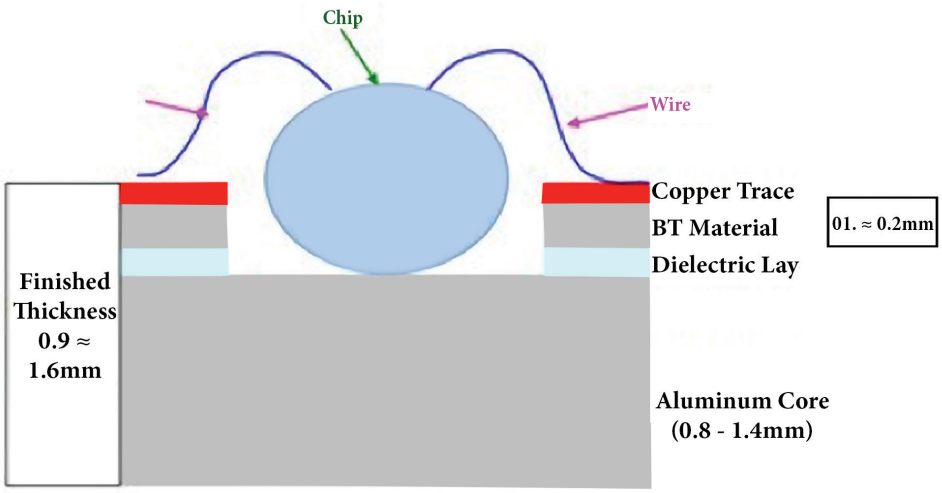

COB MCPCB + Chip + Wire

Three Main Categories to consider when manufacturing COB.

1) Die Mount or Die Attachment
2) Wire Bonding
3) Encapsulation of Dire Wires

By using wire bonding and epoxy packaging than directly embedded on MCPCB this practice can extend the lifespan of LED

3D Aluminium Boards - Typically made from 1050 material with special flexible soldermask.

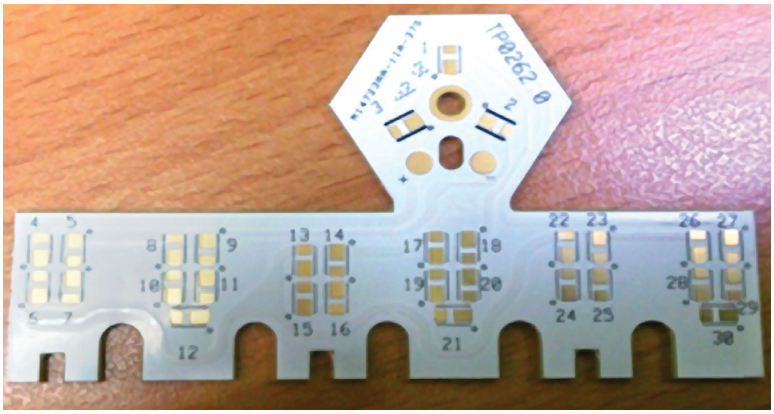

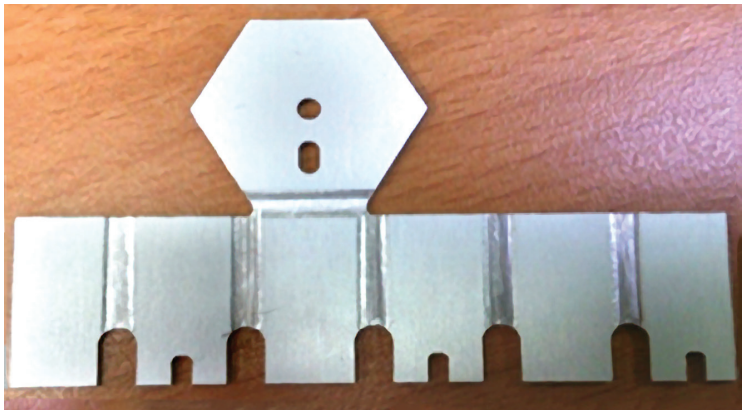

Benefits of MCPCB Vs FR-4

In addition to Heat Dissipation, take advantage of Thermal Expansion and a Significantaly Better Dimensional Stability.

MCPCB also have higher power density, electromagnetic shielding and /or improved capacitive coupling.

Thermals are unusally not needed because of lower thermal impedance but if vias are used you will get even better thermal performance.

Selective dielectric removal can be used to expose inner-layer and or the baseplate for component attachment to these layers which also reduces thermal resistance.

You can also design a coverlayer of no flow pre-preg on top of the soldermask with cut outs to isolate the leds in case of fire in high power outdoor applications.